SIZE250C, 250F PUSH PULL SOLENOID

UNIT : mm (inch)
SHOWN ENERGIZED

WEIGHT : 47g
PLUNGER (C) : 11g
PLUNGER (F) : 9g

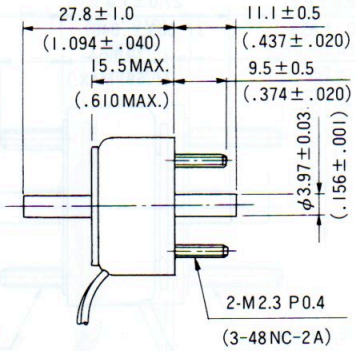

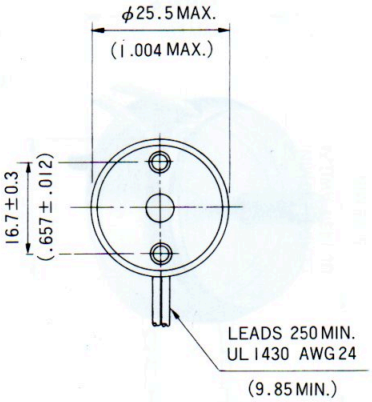

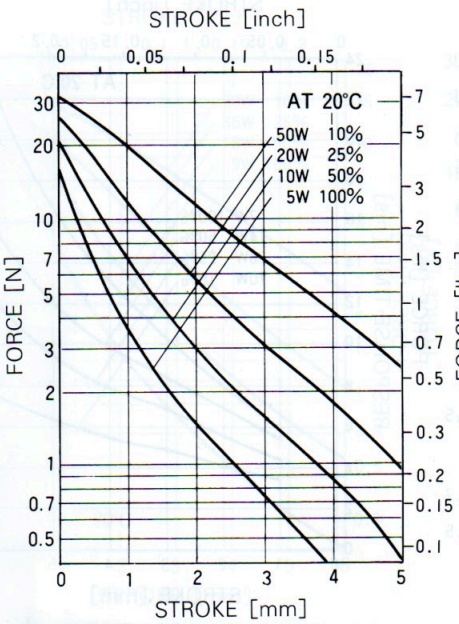

STROKE - FORCE (250C)

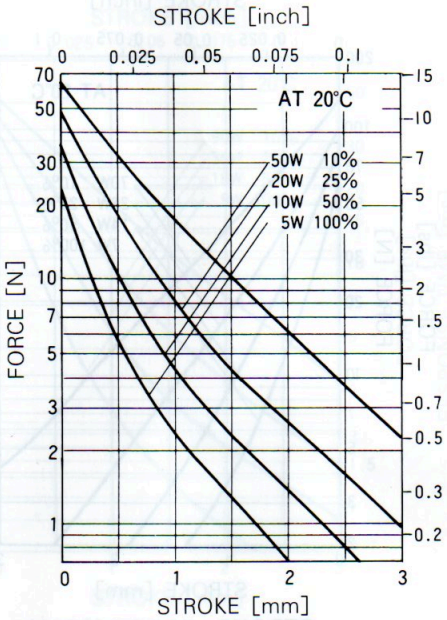

STROKE - FORCE (250F)

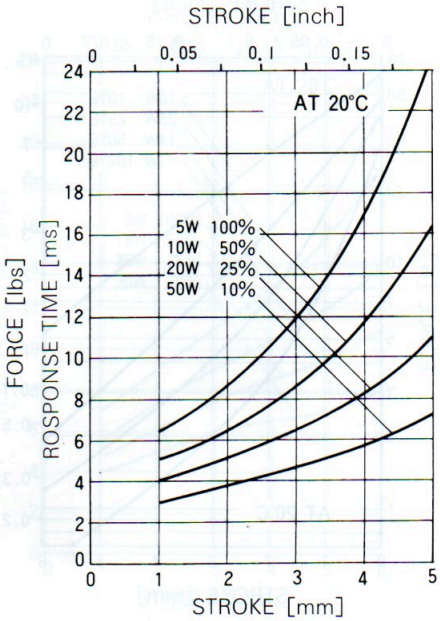

STROKE - RESPONSE TIME

COIL DATA

Heat sink : 80×80×3mm aluminum

duty cycle = "on" time / ("on" time + "off" time) ×100%			100% continuous	50% or less	25% or less	10% or less
MAX. "on" time in seconds			∞	100	36	7
watts at 20°C			5	10	20	50
ampere-turns at 20°C			340	480	680	1075
AWG no.	resistance Ω ±10% (at 20°C)	no. turns	volts DC			
25	0.85	138	2.1	3.0	4.2	6.6
26	1.42	184	2.6	3.7	5.2	8.3
27	1.90	197	3.3	4.6	6.6	10.4
28	3.21	272	4.0	5.7	8.0	12.7
29	5.11	340	5.1	7.2	10.2	16.2
30	8.03	439	6.2	8.8	12.4	19.7
31	12.95	560	7.9	11.1	15.7	25
32	20.25	690	10	14.1	20	32
33	29.97	839	12.1	17.1	24	38
34	49.60	1097	15.4	22	31	49
35	82.64	1396	20	28	40	64
36	110	1551	24	34	48	76
37	157	1776	30	42	60	95
38	237	2180	37	52	74	117
39	426	3110	47	66	93	147
40	698	3802	62	88	125	197